# Work Order ID 68779

*Thursday, April 21, 2011 8:49:07 AM*



**Item ID:** D3256-3 **Accept** **Setup Start**

**Revision ID:** **Stop**

**Item Name:** Gasket

**Start Date:** 4/20/2011 **Start Qty:** 6.00 **Cust Item ID:**

**Required Date:** 4/25/2011 **Req'd Qty:** 6.00 **Customer:**

**Reference:**

**Approvals:** **Process Plan:** N **Date:** 11-04-21 **Tooling:** _____ **Date:** _____ **Run Start**

**QC:** _____ **Date:** _____ **SPC (Y/N):** _____ **Date:** _____ **Stop**

| Sequence ID/ Work Center ID | Operation Description | Set Up/ Run Hours | Tool ID | Tool # | Plan Code | Accept Qty | Reject Qty | Reject Number | Insp. Stamp |
|---|---|---|---|---|---|---|---|---|---|
| **Draw Nbr** | **Revision Nbr** | | | | | | | | |
| D3256 | Rev C | | | | | | | | |
| 100 | FLOW WATER JET | 0.00 | | | | | | | |
| Waterjet | **Memo** | 0.00 | | | | B 11-4-25 | | | |
| FLOW CNC Waterjet | 1-Cut as per Dwg D3256☐Dwg Rev: C ☐Prog Rev: C ☐2-Deburr if necessary | | | | | | | | |
| | | | | | | 6 | | | |
| 110 | QC2- Inspect parts off machine FAI/FAIB | 0.00 | | | | | | | |
| QC | **Memo** | 0.00 | | | | B 11-4-25 | | | |
| Quality Control | | | | | | | | | |
| 120 | QC8- Inspect parts - second check | 0.00 | | | | | | | |
| QC | **Memo** | 0.00 8 11/04/26 | | | | 6 | | | |
| Quality Control | | | | | | | | | |

Dart Aerospace Ltd

| W/O: | | WORK ORDER CHANGES | | | | | |
|---|---|---|---|---|---|---|---|
| DATE | STEP | PROCEDURE CHANGE | By | Date | Qty | Approval Chief Eng / Prod Mgr | Approval QC Inspector |
| | | | | | | | |
| | | | | | | | |

**Part No:** _____ **PAR #:** _____ **Fault Category:** _____ **NCR:** Yes No **DQA:** _____ **Date:** _____

**Resolution:** _____ **Disposition:** _____ **QA: N/C Closed:** _____ **Date:** _____

| NCR: | | WORK ORDER NON-CONFORMANCE (NCR) | | | | | | |
|---|---|---|---|---|---|---|---|---|
| DATE | STEP | Description of NC Section A | Corrective Action Section B | | | Verification Section C | Approval Chief Eng | Approval QC Inspector |
| | | | Initial Chief Eng | Action Description Chief Eng | Sign & Date | | | |
| | | | | | | | | |
| | | | | | | | | |
| | | | | | | | | |

**NOTE:** Date & initial all entries

H:\fFORMS\Quality Assurance\approved QA\NCRWO RevE

# Work Order ID 68779

*Thursday, April 21, 2011 8:49:07 AM*



**Item ID:** D3256-3
**Revision ID:**
**Item Name:** Gasket

**Accept**

**Setup Start**
**Stop**

**Start Date:** 4/20/2011 **Start Qty:** 6.00
**Required Date:** 4/25/2011 **Req'd Qty:** 6.00
**Reference:**

**Cust Item ID:**
**Customer:**

**Run Start**
**Stop**

**Approvals:** **Process Plan:** _____ **Date:** _____ **Tooling:** _____ **Date:** _____
**QC:** _____ **Date:** _____ **SPC (Y/N):** _____ **Date:** _____

| Sequence ID/ Work Center ID | Operation Description | Set Up/ Run Hours | Tool ID | Tool # | Plan Code | Accept Qty | Reject Qty | Reject Number | Insp. Stamp |
|---|---|---|---|---|---|---|---|---|---|
| 130 | Identify as per dwg & Stock Location: 178 | 0.00 | | | | 11/4/26 | | (6) | |
| Packaging | Memo | 0.00 | | | | | | | |
| Packaging | | | | | | | | | |
| 140 | QC21- Final Inspection - Work Order Release | 0.00 | | | | | 11/4/27 | | |
| QC | Memo | 0.00 | | | | | | | |
| Quality Control | | | | | | | | | |

UME
11-04-26

Dart Aerospace Ltd

| W/O: | | WORK ORDER CHANGES | | | | | |
|---|---|---|---|---|---|---|---|
| DATE | STEP | PROCEDURE CHANGE | By | Date | Qty | Approval Chief Eng / Prod Mgr | Approval QC Inspector |
| | | | | | | | |
| | | | | | | | |

**Part No:** _____ **PAR #:** _____ **Fault Category:** _____ **NCR:** Yes No **DQA:** _____ **Date:** _____

**Resolution:** _____ **Disposition:** _____ **QA: N/C Closed:** _____ **Date:** _____

| NCR: | | WORK ORDER NON-CONFORMANCE (NCR) | | | | | | |
|---|---|---|---|---|---|---|---|---|
| DATE | STEP | Description of NC Section A | Corrective Action Section B | | | Verification Section C | Approval Chief Eng | Approval QC Inspector |
| | | | Initial Chief Eng | Action Description Chief Eng | Sign & Date | | | |
| | | | | | | | | |
| | | | | | | | | |
| | | | | | | | | |

**NOTE:** Date & initial all entries

# Picklist Print

*Thursday, April 21, 2011 8:49:13 AM*



**Work Order ID:** 68779

**Parent Item:** D3256-3

**Parent Item Name:** Gasket

**Start Date:** 4/20/2011 **Required Date:** 4/25/2011

**Start Qty:** 6.00 **Required Qty:** 6.00

**Comments:** IPP □ B□04.12.06□Made in-house□KJ/JLM□
IPP Rev:C ecn 1052/water jet 07-11-05 DD verified by:EC

| Component Item ID/ Item Name | Replacement Item ID | Mfg/ Purch | Bin Item | Primary Location | Last Location | Route Seq ID | Unit of Measure | Qty on Hand | Qty per Kit | Total Qty | Qty Issued | Date Issued | Status |
|---|---|---|---|---|---|---|---|---|---|---|---|---|---|
| D3245<br>Gasket | | Manufactured | No | | | 100 | Each | 12.0000 | 1.02 | 6.442105<br>KB11-4-25 | | | |

| Location | Loc Qty | Loc Code |
|---|---|---|
| MAT051 | 12 | |
| 44088 | 12 | |

44088

6

Dart Aerospace Ltd

| W/O: | | WORK ORDER CHANGES | | | | | |
|---|---|---|---|---|---|---|---|
| DATE | STEP | PROCEDURE CHANGE | By | Date | Qty | Approval Chief Eng / Prod Mgr | Approval QC Inspector |
| | | | | | | | |
| | | | | | | | |

**Part No:** _____ **PAR #:** _____ **Fault Category:** _____ **NCR:** Yes No **DQA:** _____ **Date:** _____

**Resolution:** _____ **Disposition:** _____ **QA: N/C Closed:** _____ **Date:** _____

| NCR: | | WORK ORDER NON-CONFORMANCE (NCR) | | | | | | |
|---|---|---|---|---|---|---|---|---|
| DATE | STEP | Description of NC Section A | Corrective Action Section B | | | Verification Section C | Approval Chief Eng | Approval QC Inspector |
| | | | Initial Chief Eng | Action Description Chief Eng | Sign & Date | | | |
| | | | | | | | | |
| | | | | | | | | |
| | | | | | | | | |

**NOTE:** Date & initial all entries

| DART AEROSPACE LTD | Work Order: | 48779 |
|---|---|---|
| | | |
| **Description:** Access Panel | **Part Number:** | D3256-3 |
| | | |
| **Inspection Dwg:** D3256 **Rev:** C | | Page 1 of 1 |

## FIRST ARTICLE INSPECTION CHECKLIST

[X] First Article [ ] Prototype

| Drawing Dimension | Tolerance | Actual Dimension | Accept | Reject | Method of Inspection | Comments |
|---|---|---|---|---|---|---|
| 24.00 | +/-0.030 | 24.00 | ✓ | | V IB01 | |
| 6.10 | +/-0.030 | 6.101 | ✓ | | V IB02 | |
| 11.25 | +/-0.030 | 11.25 | ✓ | | V | |
| 10.55 | +/-0.030 | 10.55 | ✓ | | V | |
| 1.60 | +/-0.030 | 1.596 | ✓ | | V | |
| 1.50 | +/-0.030 | 1.480 | ✓ | | V | |
| 4.15 | +/-0.030 | 4.166 | ✓ | | V | |
| 1.30 | +/-0.030 | 1.291 | ✓ | | V | |
| 0.65 | +/-0.030 | .640 | ✓ | | V | |
| 0.65 | +/-0.030 | .633 | ✓ | | V | |
| 0.45 | +/-0.030 | .444 | ✓ | | V | |
| | | | | | | |
| | | | | | | |
| | | | | | | |
| | | | | | | |
| | | | | | | |
| | | | | | | |
| | | | | | | |
| | | | | | | |
| | | | | | | |
| | | | | | | |
| | | | | | | |
| | | | | | | |

| Measured by: | IB | Audited by: | S | Prototype Approval: | N/A |
|---|---|---|---|---|---|
| Date: | 11-4-25 | Date: | 11/4/25 | Date: | N/A |

| Rev | Date | Change | Revised by | Approved |
|---|---|---|---|---|
| A | 07.11.23 | New Issue | KJ/EC/DD | |

Dart Aerospace Ltd

| W/O: | | WORK ORDER CHANGES | | | | | |
|---|---|---|---|---|---|---|---|
| DATE | STEP | PROCEDURE CHANGE | By | Date | Qty | Approval Chief Eng / Prod Mgr | Approval QC Inspector |
| | | | | | | | |
| | | | | | | | |

**Part No:** _____ **PAR #:** _____ **Fault Category:** _____ **NCR:** Yes No **DQA:** _____ **Date:** _____

**Resolution:** _____ **Disposition:** _____ **QA: N/C Closed:** _____ **Date:** _____

| NCR: | | WORK ORDER NON-CONFORMANCE (NCR) | | | | | | |
|---|---|---|---|---|---|---|---|---|
| DATE | STEP | Description of NC Section A | Corrective Action Section B | | | Verification Section C | Approval Chief Eng | Approval QC Inspector |
| | | | Initial Chief Eng | Action Description Chief Eng | Sign & Date | | | |
| | | | | | | | | |
| | | | | | | | | |
| | | | | | | | | |

**NOTE:** Date & initial all entries

H:\FORMS\Quality Assurance\approved QA\NCRWO RevE

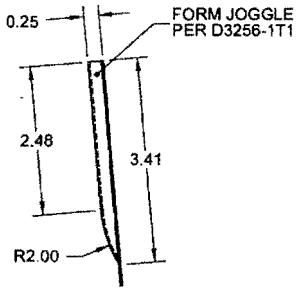


**DETAIL A**
SCALE 1 : 2

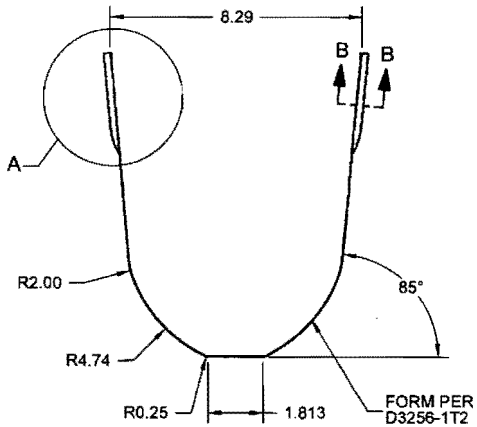


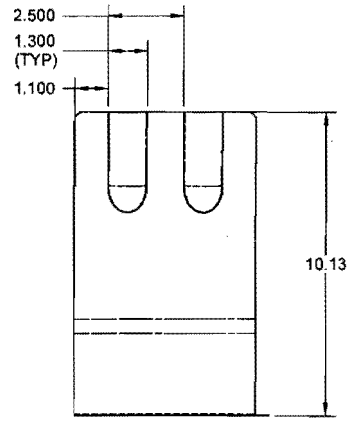


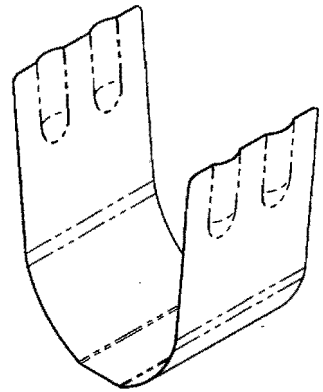

**D3256-1 ACCESS PANEL**
(MAKE FROM D3256-1F)

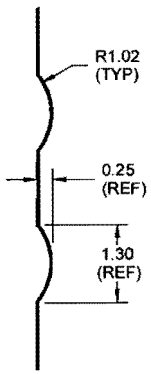


**SECTION B-B**
SCALE 1 : 2
(VIEW ROTATED)

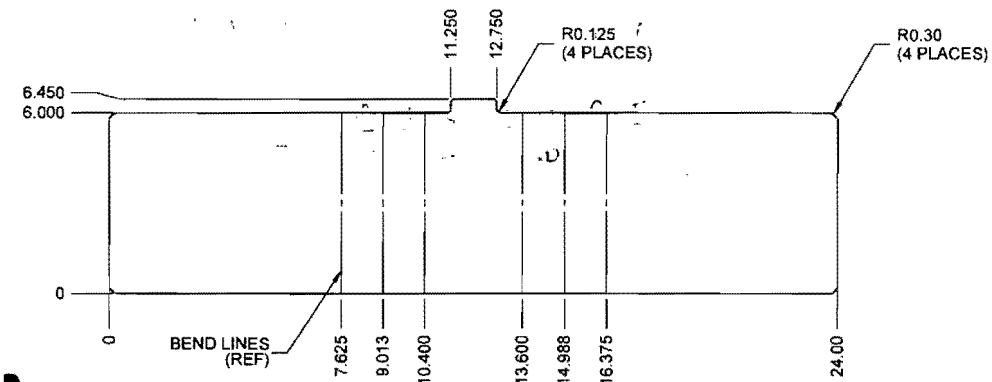


**D3256-1F FLAT PATTERN** 1

SHOP COPY
RETURN TO
ENGINEERING
UNCONTROLLED COPY
SUBJECT TO AMENDMENT
WITHOUT NOTICE
WORK ORDER
NO. 68729

11-04-21

RELEASED
07.10.23

NOTES:
1) MATERIAL: AISI 304/316 STAINLESS STEEL SHEET (0.032 THICK, REF)
PER MIL-S-5019 (ANNEALED) 2B FINISH
(REF. DART SPEC. M304S22GA)
2) FINISH: NONE
3) TOLERANCES: PER DART QSI 018 UNLESS OTHERWISE NOTED
4) UNITS: INCHES UNLESS OTHERWISE NOTED
5) BREAK SHARP EDGES: 0.005 TO 0.010 MAX
6) IDENTIFICATION: IDENTIFY WITH DART P/N "D3256-1" AND B/N USING FINE POINT PERMANENT INK MARKER
7) WEIGHT: 1.37 lbs

| REV. | DESCRIPTION | BY | DATE |
|---|---|---|---|
| C | D3256-041 ELIMINATED: REMOVED (QTY.22) 0.128 HOLES FROM D3256-1F AND D3256-3 GASKET. INSTRUCTIONS TO DRILL HOLES AND INSTALL D3256-3 GASKET ARE NOW PART OF THE INSTALLATION INSTRUCTIONS | MB | 07.09.28 |
| B | D3256-3 DIM 1.30 WAS 0.65 | RF | 05.06.27 |
| A | NEW ISSUE | RF | 04.01.27 |

| | | | |
|---|---|---|---|
| DESIGN | TF | DART AEROSPACE LTD<br>HAWKESBURY, ONTARIO, CANADA | |
| DRAWN | | | |
| CHECKED | | DRAWING NO. D3256 | REV. C<br>SHEET 1 OF 2 |
| MFG. APPR. | | | |
| APPROVED | | TITLE ACCESS PANEL | SCALE 1:4 |
| DE APPR. | | | |
| DATE 07.09.28 | | | |

Dart Aerospace Ltd

| W/O: | | WORK ORDER CHANGES | | | | | |
|---|---|---|---|---|---|---|---|
| DATE | STEP | PROCEDURE CHANGE | By | Date | Qty | Approval Chief Eng / Prod Mgr | Approval QC Inspector |
| | | | | | | | |
| | | | | | | | |

**Part No:** _____ **PAR #:** _____ **Fault Category:** _____ **NCR:** Yes No **DQA:** _____ **Date:** _____

**Resolution:** _____ **Disposition:** _____ **QA: N/C Closed:** _____ **Date:** _____

| NCR: | | WORK ORDER NON-CONFORMANCE (NCR) | | | | | | |
|---|---|---|---|---|---|---|---|---|
| DATE | STEP | Description of NC Section A | Corrective Action Section B | | | Verification Section C | Approval Chief Eng | Approval QC Inspector |
| | | | Initial Chief Eng | Action Description Chief Eng | Sign & Date | | | |
| | | | | | | | | |
| | | | | | | | | |
| | | | | | | | | |

**NOTE:** Date & initial all entries

H:\fFORMS\Quality Assurance\approved QA\NCRWO RevE

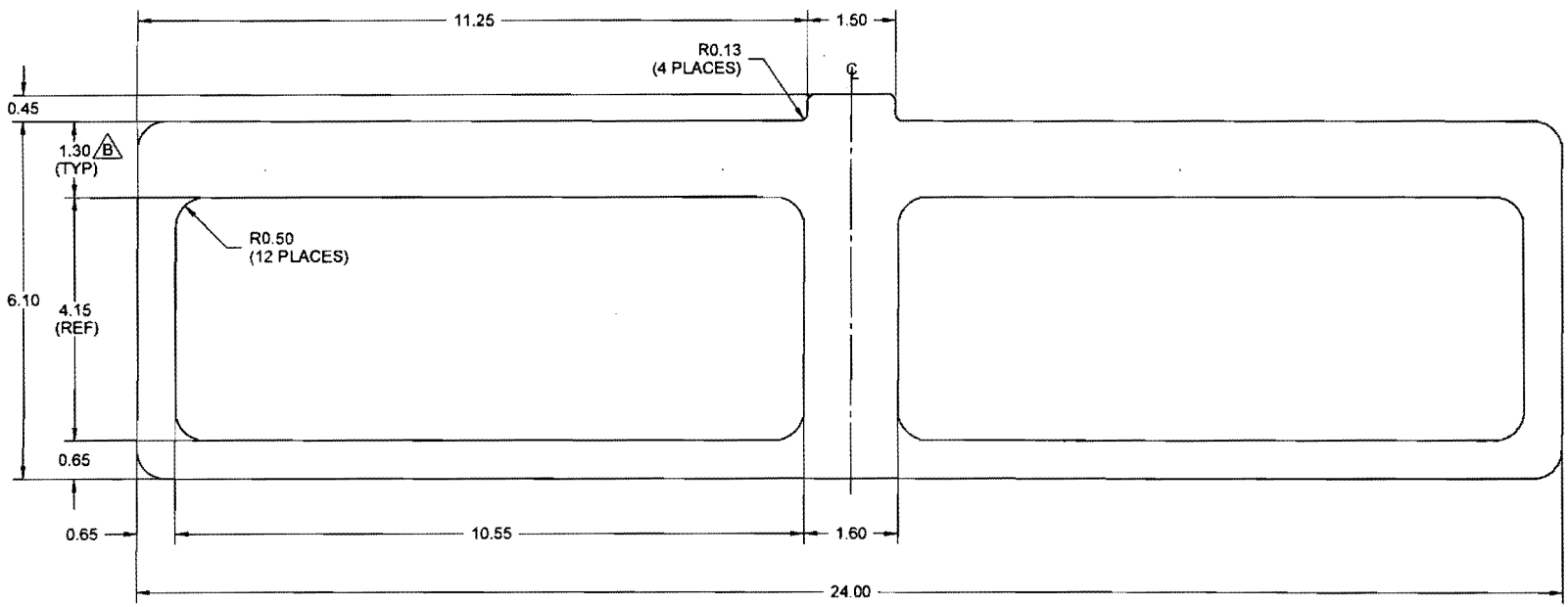


**D3256-3 ACCESS PANEL**

W/O 68779

RELEASED
07.10.23

NOTES:
1) MATERIAL: DURABLA BLACK GASKET 0.035 THICK PER MIL-A-7021C OR MIL-A-17472B (CLASS 1 & 2) OR MIL-G-12803A (GRADE P-1161A)
2) FINISH: NONE
3) TOLERANCES: PER DART QSI 018 UNLESS OTHERWISE NOTED
4) UNITS: INCHES UNLESS OTHERWISE NOTED
5) BREAK SHARP EDGES: N/A
6) IDENTIFICATION: N/A
7) WEIGHT: 0.08 lbs

| | | |
|---|---|---|
| DESIGN | | **DART AEROSPACE LTD** HAWKESBURY, ONTARIO, CANADA |
| DRAWN | | |
| CHECKED | | DRAWING NO. D3256 — REV. C — SHEET 2 OF 2 |
| MFG. APPR. | | |
| APPROVED | | TITLE: ACCESS PANEL — SCALE 1:2 |
| DE APPR. | | |
| DATE 07.09.28 | | |

Dart Aerospace Ltd

| W/O: | | WORK ORDER CHANGES | | | | | |
|---|---|---|---|---|---|---|---|
| DATE | STEP | PROCEDURE CHANGE | By | Date | Qty | Approval Chief Eng / Prod Mgr | Approval QC Inspector |
| | | | | | | | |
| | | | | | | | |

**Part No:** _____ **PAR #:** _____ **Fault Category:** _____ **NCR:** Yes No **DQA:** _____ **Date:** _____

**Resolution:** _____ **Disposition:** _____ **QA: N/C Closed:** _____ **Date:** _____

| NCR: | | WORK ORDER NON-CONFORMANCE (NCR) | | | | | | |
|---|---|---|---|---|---|---|---|---|
| DATE | STEP | Description of NC Section A | Corrective Action Section B | | | Verification Section C | Approval Chief Eng | Approval QC Inspector |
| | | | Initial Chief Eng | Action Description Chief Eng | Sign & Date | | | |
| | | | | | | | | |
| | | | | | | | | |
| | | | | | | | | |

**NOTE:** Date & initial all entries

H:\fFORMS\Quality Assurance\approved QA\NCRWO RevE